REVISIONS

NO.	DATE	DESCRIPTION
1	3/8/23	ADDRESS PEER REVIEW COMMENTS.

DEFINITIVE SUBDIVISION PLAN
for
FIELDS WAY

170 ORCHARD STREET
NEWBURY, MA
JANUARY 2023

LIST OF ABBREVIATIONS:

AC	ACRES
APPROX	APPROXIMATE
BIT	BITUMINOUS
BK	BOOK
BVW	BORDERING VEGETATED WETLAND
CLDI	CEMENT LINED DUCTILE IRON
CONC	CONCRETE
DH	DRILL HOLE
DI	DUCTILE IRON
E	EAST
EL; ELEV	ELEVATION
ESRD	ESSEX SOUTH REGISTRY OF DEEDS
EXIST	EXISTING
INV	INVERT
LOW	LIMIT OF WORK
MAX	MAXIMUM
MIN	MINIMUM
N	NORTH
N/F	NOW / FORMERLY
PG	PAGE
PROP	PROPOSED
R	RADIUS
ROW	RIGHT OF WAY
S	SOUTH
SF	SQUARE FEET
STA	STATION
TP	TEST PIT
TYP	TYPICAL
W	WEST

APPLICANT: ESTATE OF LEWIS BULGARIS
C/O DIANNE YURKAVICH
2 LAVALLEE LANE
NEWBURYPORT, MA 01950

ENGINEER: GRIFFIN ENGINEERING GROUP, LLC
495 CABOT ST, 2ND FLOOR
BEVERLY, MA 01915

ROBERT H. GRIFFIN CIVIL #36686
COMMONWEALTH OF MASSACHUSETTS
PROFESSIONAL ENGINEER
3-8-23

SURVEYOR: LEBLANC SURVEY ASSOCIATES
161 HOLTEN STREET
DANVERS, MA 01923

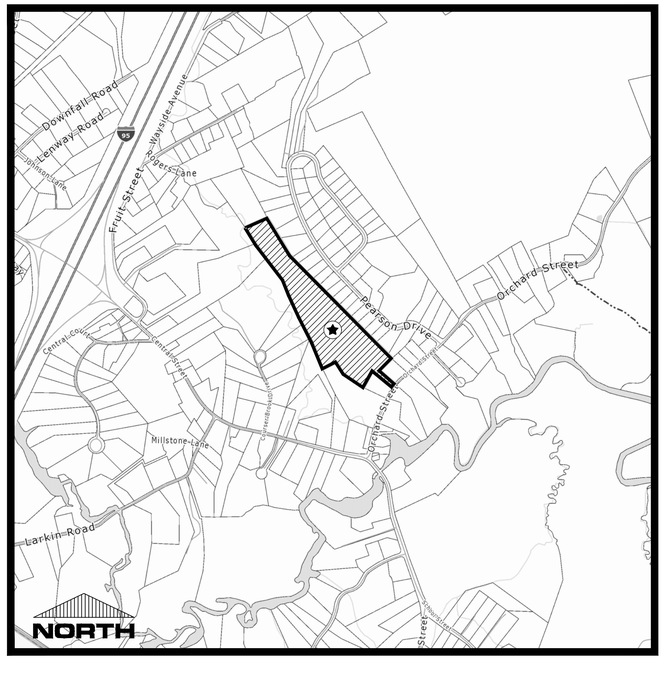

LOCUS MAP
SCALE: 1" = 800'

List of Drawings:

COVER SHEET
C-1: NOTES
C-2: EXISTING CONDITIONS PLAN I
C-3: EXISTING CONDITIONS PLAN II
C-4: LOTTING PLAN I
C-5: LOTTING PLAN II
C-6: SITE LAYOUT & UTILITIES PLAN
C-7: SITE GRADING & DRAINAGE PLAN
C-8: PROFILES & CROSS-SECTIONS
C-9: DETAILS I
C-10: DETAILS II

LIST OF WAIVERS

1. SECTION 117-18C - ENVIRONMENTAL ANALYSIS
   - BOARD MAY WAIVE ANALYSIS FOR SUBDIVISIONS OF 5 LOTS OR LESS.
2. SECTION 117-23.D - GENERAL LAYOUT AND DIMENSIONS:
   - REQUIRED: 30' PROPERTY LINE RADIUS AT STREET INTERSECTION
   - PROVIDED: NONE
3. SECTION 117-21 - STREET LOCATION AND ALIGNMENT:
   - REQUIRED: MIN. WIDTH OF R.O.W. - 53'
   - PROVIDED: MIN. WIDTH OF R.O.W. - 50'
4. SECTION 117-24 & ATTACHMENT 1 - TYPICAL ROADWAY CROSS-SECTION:
   - REQUIRED: ROADWAY CROWN; SWALE ON BOTH SIDES; STREET TREES
   - PROVIDED: SUPER ELEVATION OF CUL-DE-SAC; NO STREET TREES
5. SECTION 117-35 - SIDEWALKS/BIKEWAYS
   - NO SIDEWALK PROVIDED
6. SECTION 117-42 - TREES
   - NO STREET TREES PROVIDED

I CERTIFY THAT THIS PLAN WAS PREPARED IN ACCORDANCE WITH THE RULES AND REGULATIONS OF THE REGISTERS OF DEEDS.

_____ _____
DATE

FOR REGISTRY USE ONLY

I,_____, CLERK OF THE TOWN OR NEWBURY, CERTIFY THAT THE NOTICE OF APPROVAL OF THIS PLAN BY THE PLANNING BOARD WAS RECEIVED ON _____ AND RECORDED AT THIS OFFICE AND NO NOTICE OF APPEAL WAS RECEIVED DURING THE TWENTY (20) DAYS NEXT FOLLOWING SUCH RECEIPT AND RECORDING OF SAID NOTICE.

_____ _____
TOWN CLERK DATE

TOWN OF NEWBURY
PLANNING BOARD

_____
_____
_____
_____
_____
_____
_____

DATE:

GENERAL NOTES:

1. THE CONTRACTOR IS SPECIFICALLY CAUTIONED THAT THE LOCATION AND/OR ELEVATION OF THE EXISTING UTILITIES AND STRUCTURES AS SHOWN ON THESE PLANS IS BASED ON THE RECORDS OF VARIOUS PLANS AND WHERE POSSIBLE, MEASUREMENTS TAKEN IN THE FIELD. THIS INFORMATION IS NOT TO BE RELIED ON AS BEING EXACT OR COMPLETE. THE LOCATION OF ALL UNDERGROUND UTILITIES AND STRUCTURES SHALL BE VERIFIED IN THE FIELD PRIOR TO THE START OF CONSTRUCTION. THE CONTRACTOR MUST CONTACT THE APPROPRIATE UTILITY COMPANIES, GOVERNING PERMITTING AUTHORITIES, AND "DIG SAFE" AT LEAST 72 HOURS PRIOR TO ANY EXCAVATION WORK TO REQUEST EXACT FIELD LOCATION OF UTILITIES. THE ENGINEER OF RECORD SHALL BE NOTIFIED IN WRITING OF ANY UTILITIES INTERFERING WITH PROPOSED CONSTRUCTION AND APPROPRIATE REMEDIAL ACTION WILL BE TAKEN BY THE ENGINEER BEFORE THE CONTRACTOR PROCEEDS WITH THE WORK. IT SHALL BE THE RESPONSIBILITY OF THE CONTRACTOR TO RELOCATE ALL EXISTING UTILITIES WHICH CONFLICT WITH THE PROPOSED IMPROVEMENTS SHOWN ON THESE PLANS.

2. THE CONTRACTOR SHALL NOTIFY THE MUNICIPAL PLANNING AND ENGINEERING STAFF AT LEAST 48 HOURS PRIOR TO THE COMMENCEMENT OF CONSTRUCTION. PRE-CONSTRUCTION MEETING IS REQUIRED PRIOR TO START OF CONSTRUCTION.

3. THE CONTRACTOR SHALL BE RESPONSIBLE FOR ESTABLISHING AND MAINTAINING ALL HORIZONTAL AND VERTICAL CONTROL POINTS AND BENCH MARKS NECESSARY FOR THE WORK.

4. GRADES, BOTH EXISTING AND FINISHED, ARE INDICATED ON DRAWINGS. THE ENGINEER IS NOT RESPONSIBLE FOR EXISTING GRADES SHOWN ON DRAWINGS. CONTRACTOR SHALL CHECK ALL AREAS WHEREIN GRADES ARE SHOWN TO SATISFY HIMSELF AS TO ACTUAL CONDITIONS AND INCORPORATE ANY DISCREPANCIES DISCOVERED. CONTRACTOR SHALL BE RESPONSIBLE FOR ESTABLISHING ALL CONTROL POINTS AND MARKINGS NECESSARY FOR THE WORK. PRECAUTIONS SHALL BE TAKEN TO PRESERVE MATERIALS OUTSIDE THE LIMIT OF WORK IN THE MOST UNDISTURBED CONDITIONS POSSIBLE.

5. PROPOSED RESIDENCE FOOTPRINTS, ON-LOT UTILITIES AND GRADING ARE SHOWN FOR CONCEPTUAL PURPOSES ONLY. SEPTIC SYSTEMS SHOWN ARE APPROXIMATE & SUBJECT TO BOH APPROVAL.

GRADING & DRAINAGE NOTES:

1. ALL CATCH BASINS SHALL BE EQUIPPED WITH A GAS/OIL HOOD ON THE DISCHARGE PIPE AND SHALL HAVE A 4' DEEP SUMP IN ACCORDANCE WITH THE MASSACHUSETTS STORMWATER MANAGEMENT POLICY.

2. ALL STORM DRAINAGE PIPES SHALL BE RCP, UNLESS NOTED OTHERWISE.

3. ALL STORM SERVICE CONNECTIONS (ROOF LEADERS) SHALL BE 6" INSIDE DIAMETER SCH40 PVC OF CHDPE UNLESS OTHERWISE NOTED BY ENGINEER.

4. A MINIMUM OF 18" VERTICAL CLEARANCE SHALL BE MAINTAINED WHERE WATER SERVICES CROSS DRAIN LINES.

5. RIP RAP SPLASH PADS AND FLOW SPREADER BERMS SHALL BE PROVIDED AT ALL OUTFALLS.

6. REFER TO THE OPERATIONS & MAINTENANCE PLAN (O&M) FOR ADDITIONAL INFORMATION.

7. NO EARTH IS TO BE REMOVED FROM THE SUBDIVISION IN CONJUNCTION WITH CONSTRUCTION.

UTILITY NOTES:

1. ALL WATER MAINS ARE TO BE INSTALLED WITH A MINIMUM OF FIVE FEET OF COVER AND A MAXIMUM OF SIX FEET OF COVER EXCEPT AS NOTED, DETAILED OTHERWISE, OR REQUIRED BY THE CONTROLLING MUNICIPAL AUTHORITY. A VARIATION IN THESE DEPTHS IS PERMITTED (IF ALLOWED BY CONTROLLING MUNICIPAL AUTHORITY) WHERE REQUIRED TO AVOID CONFLICTS WITH OTHER UTILITIES. HOWEVER, CONTRACTOR IS REQUIRED TO INSTALL WATER MAINS AND APPURTENANCES IN ACCORDANCE WITH LOCAL REQUIREMENTS OF THE CONTROLLING MUNICIPAL AUTHORITY, INCLUDING BUT NOT LIMITED TO CLEARANCES, BEDDING, BACKFILL, INSULATION, ETC. ANY VARIATION FROM THE PLAN LAYOUT MUST BE BROUGHT TO THE ATTENTION OF THE ENGINEER PRIOR TO INSTALLATION.

2. GENERALLY, WATER MAIN FITTINGS IDENTIFIED ON THESE DRAWINGS ARE SHOWN FOR INSTALLATION LOCATION PURPOSES. THE CONTRACTOR SHALL NOTE THAT NOT ALL FITTINGS REQUIRED FOR THE WORK ARE NOTED, SHOWN, OR INDICATED.

3. ALL WATER MAIN FITTINGS, TEES, HYDRANTS, ETC. SHALL BE RESTRAINED WITH CONCRETE THRUST BLOCKS AND MECHANICAL JOINT RESTRAINTS.

4. ALL HYDRANTS SHALL BE INSTALLED WITH A 6" C.L.D.I. RUNOUT AND SHALL BE INSTALLED WITH APPROPRIATELY SIZED GATE VALVE, BOX, AND TEE FITTING. ALL HYDRANTS SHALL MEET LOCAL MUNICIPAL SPECIFICATION REQUIREMENTS AND SHALL BE INSTALLED IN ACCORDANCE WITH LOCAL MUNICIPAL REQUIREMENTS. HYDRANTS AND THEIR PIPING SHALL BE MECHANICALLY RESTRAINED.

5. A MINIMUM OF 10 FEET CLEAR HORIZONTAL SPACE SHALL BE MAINTAINED BETWEEN SANITARY SEWER MAINS AND WATER MAINS. WHENEVER CONDITIONS PREVENT A LATERAL SEPARATION OF 10 FEET TO A WATER MAIN, THE WATER MAIN SHALL BE LAID IN A SEPARATE TRENCH AND THE ELEVATION THE CROWN OF THE SEWER SHALL BE AT LEAST 18 INCHES BELOW THE INVERT OF THE WATER MAIN.

6. DOMESTIC WATER SERVICES 2.5" AND SMALLER SHALL BE TYPE K COPPER TUBING AND SHALL BE INSTALLED WITH APPROPRIATELY SIZED CORPORATION STOP WITH APPROVED SADDLE, CURB STOP, AND CURB BOX.

7. ALL WATER MAINS 3" OR LARGER SHALL BE CEMENT LINED DUCTILE IRON – CLASS 52, AND SHALL BE INSTALLED WITH APPROPRIATELY SIZED FITTINGS AND GATE VALVES.

8. DOMESTIC WATER SERVICES SHALL BE INSTALLED WITH APPROPRIATELY SIZED GATE, BOX AND TEE FITTINGS.

9. ALL WATER MAIN APPURTENANCES, MATERIALS, METHODS OF INSTALLATION AND TESTING REQUIREMENTS SHALL MEET OR EXCEED ALL LOCAL MUNICIPAL REQUIREMENTS.

10. PRESSURE AND LEAKAGE TEST, DISINFECTION AND FLUSHING SHALL BE IN ACCORDANCE WITH ALL LOCAL MUNICIPAL STANDARDS AND REQUIREMENTS. CONTRACTOR SHALL BE RESPONSIBLE FOR ALL COSTS IN CONNECTION WITH UTILITY TESTS, FLUSHING AND INSPECTION AS REQUIRED BY THE LOCAL MUNICIPALITY.

11. PRIMARY WATER METER AND BACKFLOW PREVENTED SHALL BE LOCATED AT THE POINT WHERE THE WATER LINE ENTERS THE BUILDING UNLESS OTHERWISE NOTED OR DETAILED ON THE DRAWINGS.

12. ALL GRAVITY SEWER PIPES SHALL BE POLYVINYL CHLORIDE PIPE (PVC) SDR35 UNLESS NOTED OTHERWISE.

13. A MINIMUM OF 18" CLEARANCE SHALL BE MAINTAINED WHERE WATER MAINS CROSS STORM DRAIN LINES

14. WHERE WATER SERVICES CROSS OVER SEWER MAINS WITH LESS THAN 18" VERTICAL CLEARANCE, AND WHERE WATER SERVICES CROSS BENEATH SEWER MAINS, THE WATER LINE SHALL BE CAREFULLY ENCASED IN CONCRETE. ENCASEMENT SHALL EXTEND FROM PIPE SURFACES A MINIMUM DISTANCE OF 8" ALL AROUND AND ENCASEMENT SHALL EXTEND ALONG THE WATER SERVICE A MINIMUM DISTANCE OF 10 FEET FROM THE OTHER PIPE AS MEASURED NORMALLY FROM ALL POINTS ALONG THE PIPES.

15. WHERE SEWER SERVICES CROSS OVER WATER MAINS AND WHERE SEWER SERVICES CROSS BENEATH WATER MAINS WITH LESS THAN 18" OF VERTICAL CLEARANCE, THE SEWER SERVICE SHALL BE CAREFULLY ENCASED IN CONCRETE. ENCASEMENT SHALL EXTEND FROM PIPE SURFACES A MINIMUM DISTANCE OF 8" ALL AROUND AND ENCASEMENT SHALL EXTEND ALONG THE SEWER SERVICE A MINIMUM DISTANCE OF 10 FEET FROM THE OTHER PIPE AS MEASURED NORMALLY FROM ALL POINTS ALONG THE PIPES.

16. PROPOSED GAS SERVICE LOCATIONS ARE APPROXIMATE ONLY. THE CONTRACTOR SHALL CONFIRM WITH THE GAS COMPANY THAT GAS LINES INSTALLATIONS SHALL BE BY THE LOCAL GAS COMPANY. THE CONTRACTOR SHALL GIVE THE GAS COMPANY ADVANCE NOTICE OF WHEN THE GAS LINE CAN BE INSTALLED. THE CONTRACTOR IS RESPONSIBLE FOR ALL COORDINATION, EXCAVATION, BACKFILL AND COMPACTION FOR THE GAS LINE.

17. ELECTRICAL, TELEPHONE & CABLE SERVICES SHALL BE COORDINATED AND SCHEDULED WITH THE APPROPRIATE UTILITY COMPANY SERVICING THE PROJECT SITE.

18. UTILITY STUBS FOR BUILDING CONNECTIONS SHALL BE INSTALLED DURING STREET CONSTRUCTION AND BROUGHT ON TO THE SERVICING LOT.

19. THE PRIMARY ELECTRICAL, TELEPHONE & CABLE DISTRIBUTION SYSTEMS ARE SHOWN GRAPHICALLY FOR COORDINATION PURPOSES. ALL ASPECTS OF THE THESE SERVICES SHALL BE DESIGN/BUILD BY THE CONTRACTOR IN ACCORDANCE WITH ALL LOCAL, STATE, FEDERAL, AND UTILITY COMPANY STANDARDS AND CODES.

EROSION CONTROL NOTES:

1. THE LIMIT OF WORK LINE FOR THE PROJECT SHALL BE THE SAME AS THE LIMIT OF THE WORK NECESSARY FOR GRADING OR UTILITY PURPOSES. NO WORK SHALL OCCUR BEYOND THESE LIMITS OR BEYOND THE LIMITS DEFINED BY THE EROSION CONTROL AND/OR CLEARING LIMIT LINES.

2. ALL EROSION AND SEDIMENTATION CONTROL MEASURES SHALL BE CONSTRUCTED IN ACCORDANCE WITH THE MASSACHUSETTS EROSION AND SEDIMENT CONTROL GUIDELINES FOR URBAN AND SUBURBAN AREAS, DATED MARCH 1997, AS AMENDED, AND ALL LOCAL MUNICIPAL REGULATIONS.

3. EROSION AND SEDIMENTATION CONTROL MEASURES SHALL BE IN PLACE PRIOR TO THE COMMENCEMENT OF ANY SITE WORK OR EARTHWORK OPERATIONS AND SHALL BE MAINTAINED THROUGHOUT CONSTRUCTION, AND REMAIN IN PLACE, UNTIL ALL SITE WORK IS COMPLETE AND GROUND COVER IS ESTABLISHED.

4. THE CONTRACTOR IS HEREBY MADE AWARE THAT SOIL CHARACTERISTICS, TOPOGRAPHY, AND WETLANDS AT THIS SITE MAKE IT PARTICULARLY SUSCEPTIBLE TO SOIL EROSION AND SENSITIVE TO ITS CONSEQUENCES. ADDITIONAL EROSION CONTROL MEASURES MAY BE DEEMED NECESSARY BY THE ENGINEER OR THE MUNICIPALITY.

5. THE EROSION CONTROL MEASURES SHOWN ON THESE DRAWINGS ARE REPRESENTATIVE OF A SINGLE STAGE OF CONSTRUCTION. THE CONTRACTOR SHALL BE RESPONSIBLE FOR THE SITING, RELOCATION, AND AUGMENTATION OF EROSION CONTROL DEVICES INCLUDING HAYBALES, SILTFENCE, DRAINAGE SWALES, TEMPORARY SEDIMENTATIONS BASINS, CRUSHED STONE, ETC. THE CONTRACTOR SHALL ANTICIPATE AND MODIFY EROSION CONTROL MEASURES BASED ON PAST AND CURRENT WEATHER CONDITIONS, SEASON AND EXPECTED FUTURE CONSTRUCTION ACTIVITIES, AS THE PROJECT PROGRESSES AND SITE DRAINAGE CONDITIONS CHANGE. IN THE EVENT THAT INSUFFICIENCIES IN THE EROSION CONTROL PRACTICES ARE IDENTIFIED BY THE OWNER, OR AN AGENT FOR THE OWNER, THE CONTRACTOR SHALL BE RESPONSIBLE FOR REPAIRING, SUPPLEMENTING, RELOCATION, OR OTHERWISE PROVIDING EROSION CONTROLS AS NECESSARY AT NO ADDITIONAL COST TO THE OWNER.

6. STOCKPILES SHALL BE SURROUNDED WITH STAKED HAYBALES AND/OR SILTATION FENCES TO PREVENT AND/OR CONTROL SILTATION AND EROSION. THE LOCATION OF THE STOCKPILE AREAS MAY BE MODIFIED AS APPROVED BY THE ON-SITE EROSION CONTROL MONITOR, BUT SHALL BE LOCATED OUTSIDE THE 100' WETLAND BUFFER ZONE. TOPS OF STOCKPILES SHALL BE COVERED IN SUCH A MANNER THAT STORMWATER DOES NOT INFILTRATE THE MATERIALS AND THEREBY SUCCEED IN MAKING IT UNSUITABLE FOR USE.

7. EARTHWORK ACTIVITY ON THE SITE SHALL BE DONE IN A MANNER SUCH THAT RUNOFF IS DIRECTED TO TEMPORARY DRAINAGE SWALES AND SEDIMENTATION BASINS.

8. HAYBALE FILTERS AND/OR FILTER BAGS SHALL BE PLACED AT ALL EXISTING & PROPOSED CATCH BASINS SUBJECT TO STORMWATER RUN-OFF FROM PROPOSED EARTHWORK AREAS DURING CONSTRUCTION, OR AS DIRECTED BY THE OWNER/ENGINEER. NO SEDIMENT SHALL ENTER THE ON-SITE OR OFF-SITE DRAINAGE SYSTEM AT ANY TIME. FILTER BAGS SHALL BE INSTALLED INSIDE CATCH BASINS IN HIGH TRAFFIC AREAS.

9. ALL EROSION CONTROL MEASURES SHALL BE ROUTINELY INSPECTED, CLEANED, REPAIRED AND REPLACED AS NECESSARY THROUGHOUT ALL PHASES OF CONSTRUCTION. INSPECTIONS SHALL TAKE PLACE AT LEAST ONCE A WEEK, PRIOR TO WEEKENDS AND WHEN PRECIPITATION IS FORECASTED. DEFICIENCIES OF ANY KIND SHALL BE CORRECTED PRIOR TO THE EXPECTED PRECIPITATION OR PRIOR TO LEAVING THE SITE. INSPECTIONS SHALL ALSO OCCUR AFTER EACH RAINFALL EVENT OF GREATER THAN 0.5" OF RAINFALL AND DEFICIENCIES PROMPTLY CORRECTED.

10. ALL PROPOSED SLOPES (EXCLUDING RIP-RAP SLOPES) STEEPER THAN 5:1 AND ALL SLOPES REGARDLESS OF SLOPE WITH AN OVERALL CHANGE IN GRADE GREATER THAN 10 FEET FROM TOP TO BOTTOM SHALL BE STABILIZED WITH EROSION CONTROL MATTING. IT IS THE RESPONSIBILITY OF THE CONTRACTOR TO REPAIR ANY DAMAGE TO PROPOSED SLOPES (SLOUGHING, EROSION, ETC.) THAT RESULT DURING CONSTRUCTION, AND INSTALL EROSION CONTROL MATTING AS DIRECTED BY THE ARCHITECT/ENGINEER.

11. THE CONTRACTOR SHALL KEEP ON SITE AT ALL TIMES ADDITIONAL HAYBALES, EXTRA SILTATION FENCING, A STOCKPILE OF CRUSHED STONE, EXTRA FILTER BAGS OR ANY OTHER ITEM SPECIFIED HEREIN FOR EROSION/SEDIMENT CONTROL FOR INSTALLATION AT THE DIRECTION OF THE ENGINEER OR OWNER'S REPRESENTATIVE TO MITIGATE ANY EMERGENCY CONDITIONS.

12. THE ENTRANCE AND EXIT TO AND FROM THE SITE SHALL BE CLEARED OF ALL VEGETATION, ROOTS AND OTHER OBJECTIONABLE MATERIAL AS DETERMINED BY THE ENGINEER OR OWNER'S REPRESENTATIVE. AREAS OF ENTRANCE AND EXIT SHALL BE MAINTAINED IN A CONDITION THAT WILL PREVENT TRACKING OR FLOWING OF SEDIMENT FROM THE PROJECT SITE. ALL SEDIMENT SPILLED, DROPPED, WASHED OR TRACKED OFF THE PROJECT SITE MUST BE REMOVED IMMEDIATELY.

13. PRIOR TO INITIATION OF CONSTRUCTION ACTIVITIES AT THE SITE, THE CONTRACTOR SHALL ENGAGE AN INDIVIDUAL WITH PROFESSIONAL TRAINING AND EXPERTISE IN EROSION AND SEDIMENT CONTROL TO MONITOR SAME. THE EROSION CONTROL MONITOR SHALL PREPARE A MONTHLY REPORT WHICH SHALL BE KEPT ON SITE AT ALL TIMES AND PROVIDED TO LOCAL, STATE, AND FEDERAL AGENTS UPON REQUEST. THIS REPORT SHALL INDICATE THE STATUS OF THE EROSION CONTROLS AND ANY MAINTENANCE REQUIRED AND PERFORMED. INSPECTIONS AND REPORTS SHALL CONFORM TO THE REQUIREMENTS OF THE NATIONAL POLLUTANT DISCHARGE ELIMINATION SYSTEM (NPDES) PERMIT.

14. ANY DEWATERING REQUIRED ON THE SITE SHALL DISCHARGE INTO A TEMPORARY SILT REMOVAL BASIN LOCATED OUTSIDE OF THE 100' BUFFER ZONE FROM WETLANDS.

I,_____, CLERK OF THE TOWN OR NEWBURY, CERTIFY THAT THE NOTICE OF APPROVAL OF THIS PLAN BY THE PLANNING BOARD WAS RECIEVED ON _____ AND RECORDED AT THIS OFFICE AND NO NOTICE OF APPEAL WAS RECEIVED DURING THE TWENTY (20) DAYS NEXT FOLLOWING SUCH RECEIPT AND RECORDING OF SAID NOTICE.

_____ _____
TOWN CLERK DATE

FOR REGISTRY USE ONLY

I CERTIFY THAT THIS PLAN WAS PREPARED IN ACCORDANCE WITH THE RULES AND REGULATIONS OF THE REGISTERS OF DEEDS.

_____ _____
DATE

TOWN OF NEWBURY
PLANNING BOARD

DATE:

OWNER & APPLICANT:
ESTATE OF LEWIS BULGARIS
C/O DIANNE YURKAVICH
2 LAVALLEE LANE
NEWBURYPORT, MA 01915

No.	Date	Description

Revisions

ROBERT H. GRIFFIN CIVIL #36686
1.4.23

Griffin Engineering Group, LLC
495 Cabot Street, 2nd Floor
Beverly, MA 01915
Tel: 978-927-5111
Fax: 978-927-5103

FIELDS WAY SUBDIVISION

170 ORCHARD ST.
NEWBURY, MA

NOTES

Scale: 1"=40'
Job No: 2043
Date: 1/4/23

C-1

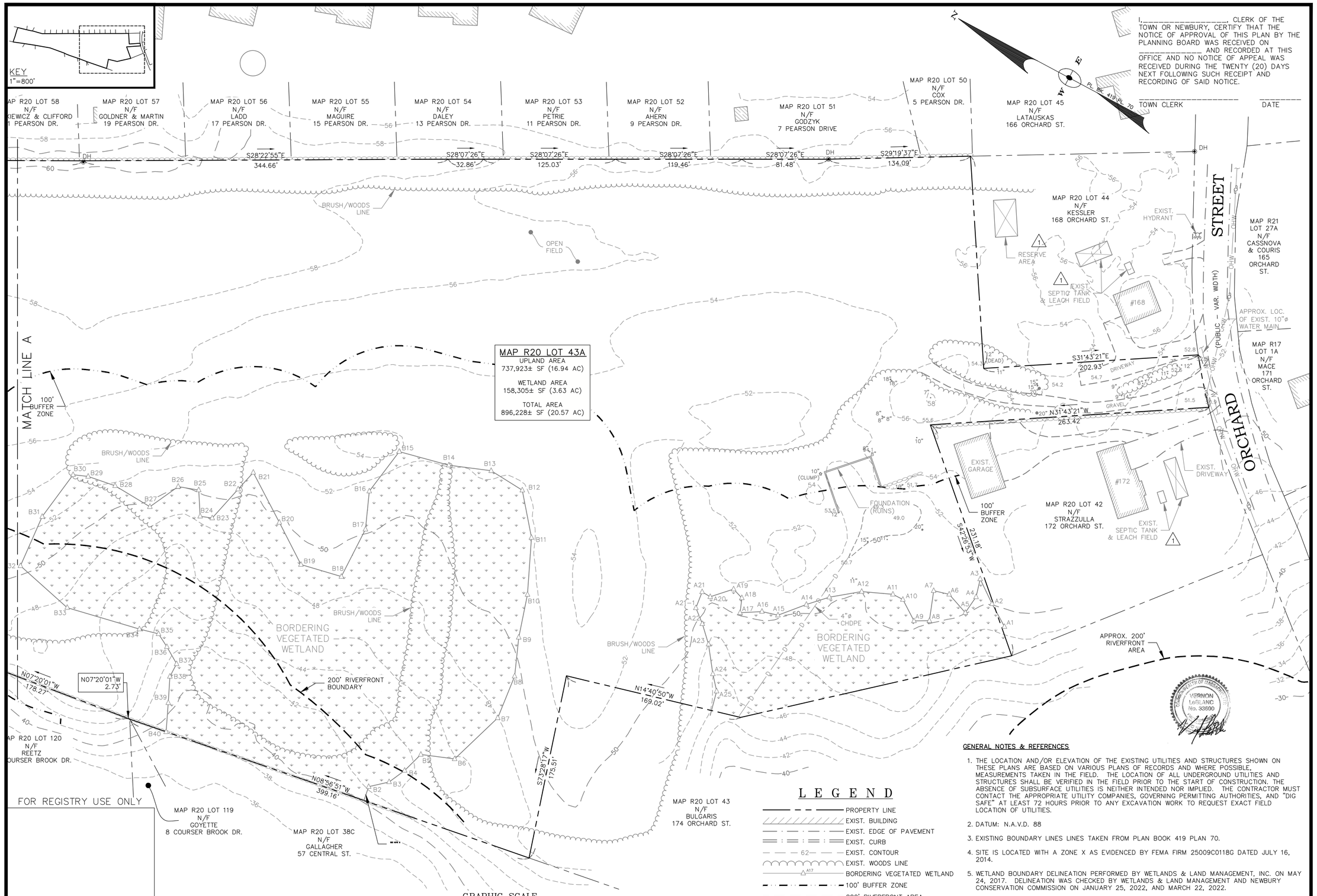

I,_____, CLERK OF THE TOWN OR NEWBURY, CERTIFY THAT THE NOTICE OF APPROVAL OF THIS PLAN BY THE PLANNING BOARD WAS RECEIVED ON _____ AND RECORDED AT THIS OFFICE AND NO NOTICE OF APPEAL WAS RECEIVED DURING THE TWENTY (20) DAYS NEXT FOLLOWING SUCH RECEIPT AND RECORDING OF SAID NOTICE.

_____ TOWN CLERK

_____ DATE

FOR REGISTRY USE ONLY

I CERTIFY THAT THIS PLAN WAS PREPARED IN ACCORDANCE WITH THE RULES AND REGULATIONS OF THE REGISTERS OF DEEDS.

_____ DATE

LEGEND

- PROPERTY LINE
- EXIST. BUILDING
- EXIST. EDGE OF PAVEMENT
- EXIST. CURB
- EXIST. CONTOUR
- EXIST. WOODS LINE
- BORDERING VEGETATED WETLAND
- 100' BUFFER ZONE
- 200' RIVERFRONT AREA

GENERAL NOTES & REFERENCES

1. THE LOCATION AND/OR ELEVATION OF THE EXISTING UTILITIES AND STRUCTURES SHOWN ON THESE PLANS ARE BASED ON VARIOUS PLANS OF RECORDS AND WHERE POSSIBLE, MEASUREMENTS TAKEN IN THE FIELD. THE LOCATION OF ALL UNDERGROUND UTILITIES AND STRUCTURES SHALL BE VERIFIED IN THE FIELD PRIOR TO THE START OF CONSTRUCTION. THE ABSENCE OF SUBSURFACE UTILITIES IS NEITHER INTENDED NOR IMPLIED. THE CONTRACTOR MUST CONTACT THE APPROPRIATE UTILITY COMPANIES, GOVERNING PERMITTING AUTHORITIES, AND "DIG SAFE" AT LEAST 72 HOURS PRIOR TO ANY EXCAVATION WORK TO REQUEST EXACT FIELD LOCATION OF UTILITIES.
2. DATUM: N.A.V.D. 88
3. EXISTING BOUNDARY LINES LINES TAKEN FROM PLAN BOOK 419 PLAN 70.
4. SITE IS LOCATED WITH A ZONE X AS EVIDENCED BY FEMA FIRM 25009C0118G DATED JULY 16, 2014.
5. WETLAND BOUNDARY DELINEATION PERFORMED BY WETLANDS & LAND MANAGEMENT, INC. ON MAY 24, 2017. DELINEATION WAS CHECKED BY WETLANDS & LAND MANAGEMENT AND NEWBURY CONSERVATION COMMISSION ON JANUARY 25, 2022, AND MARCH 22, 2022.
6. ABBREVIATED NOTICE OF RESOURCE AREA DELINEATION (ANRAD) DATED OCTOBER 26, 2017 AND EXTENDED ON MAY 12, 2022 (DEP NO. 050-1254)
7. TOPOGRAPHIC DETAIL BASED ON USGS 2011 LiDAR.
8. WETLAND LINE INTERPOLATED FROM LAST FLAG TO PROPERTY BOUNDARY (NOT PART OF 2022 ANRAD).

TOWN OF NEWBURY
PLANNING BOARD

_____

_____

_____

_____

_____

_____

DATE:

OWNER & APPLICANT:
ESTATE OF LEWIS BULGARIS
C/O DIANNE YURKAVICH
2 LAVALLEE LANE
NEWBURYPORT, MA 01915

No.	Date	Description
1	3/8/23	SHOW #168 & 172 SEPTICS; SHOW MORE TOPO ON #168; ADD EXIST. SPOT GRADES.

Revisions

ROBERT H. GRIFFIN CIVIL #36686
3-8-23

Griffin Engineering Group, LLC
495 Cabot Street, 2nd Floor
Beverly, MA 01915
Tel: 978-927-5111
Fax: 978-927-5103

VERNON LeBLANC No. 33600

FIELDS WAY SUBDIVISION

170 ORCHARD ST.
NEWBURY, MA

EXISTING CONDITIONS PLAN I

Scale: 1"=40'
Job No: 2043
Date: 1/4/23

C-2

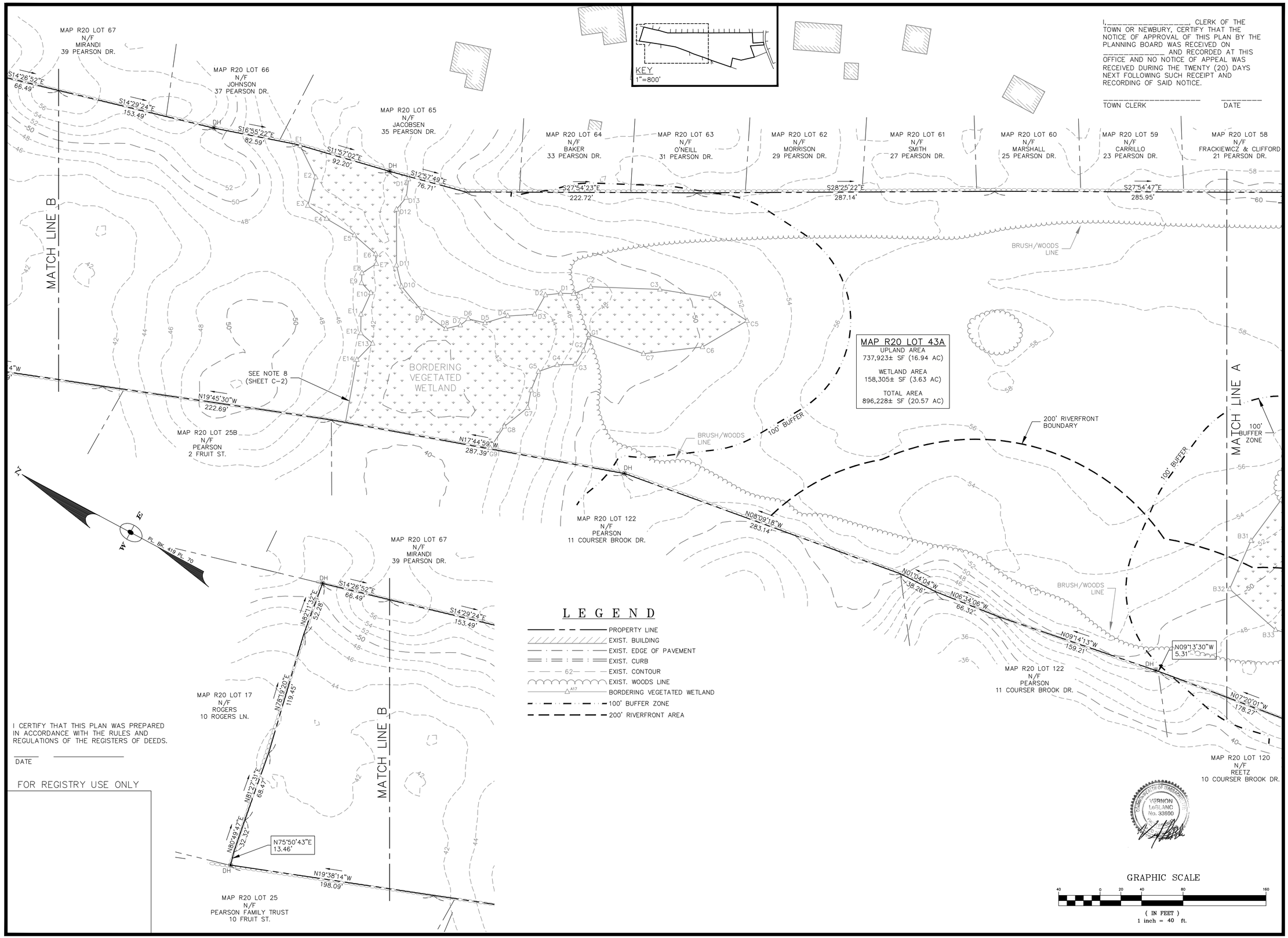

I, _____, CLERK OF THE TOWN OR NEWBURY, CERTIFY THAT THE NOTICE OF APPROVAL OF THIS PLAN BY THE PLANNING BOARD WAS RECEIVED ON _____ AND RECORDED AT THIS OFFICE AND NO NOTICE OF APPEAL WAS RECEIVED DURING THE TWENTY (20) DAYS NEXT FOLLOWING SUCH RECEIPT AND RECORDING OF SAID NOTICE.

_____ TOWN CLERK

_____ DATE

I CERTIFY THAT THIS PLAN WAS PREPARED IN ACCORDANCE WITH THE RULES AND REGULATIONS OF THE REGISTERS OF DEEDS.

_____ DATE

FOR REGISTRY USE ONLY

TOWN OF NEWBURY PLANNING BOARD

DATE:

OWNER & APPLICANT:
ESTATE OF LEWIS BULGARIS
C/O DIANNE YURKAVICH
2 LAVALLEE LANE
NEWBURYPORT, MA 01915

No.	Date	Description

Revisions

ROBERT H. GRIFFIN CIVIL #35586 PROFESSIONAL ENGINEER COMMONWEALTH OF MASSACHUSETTS

1.4.23

VERNON LeBLANC No. 33600 PROFESSIONAL LAND SURVEYOR COMMONWEALTH OF MASSACHUSETTS

Griffin Engineering Group, LLC
495 Cabot Street, 2nd Floor
Beverly, MA 01915
Tel: 978-927-5111
Fax: 978-927-5103

FIELDS WAY SUBDIVISION

170 ORCHARD ST.
NEWBURY, MA

EXISTING CONDITIONS PLAN II

Scale: 1"=40'
Job No: 2043
Date: 1/4/23

C-3

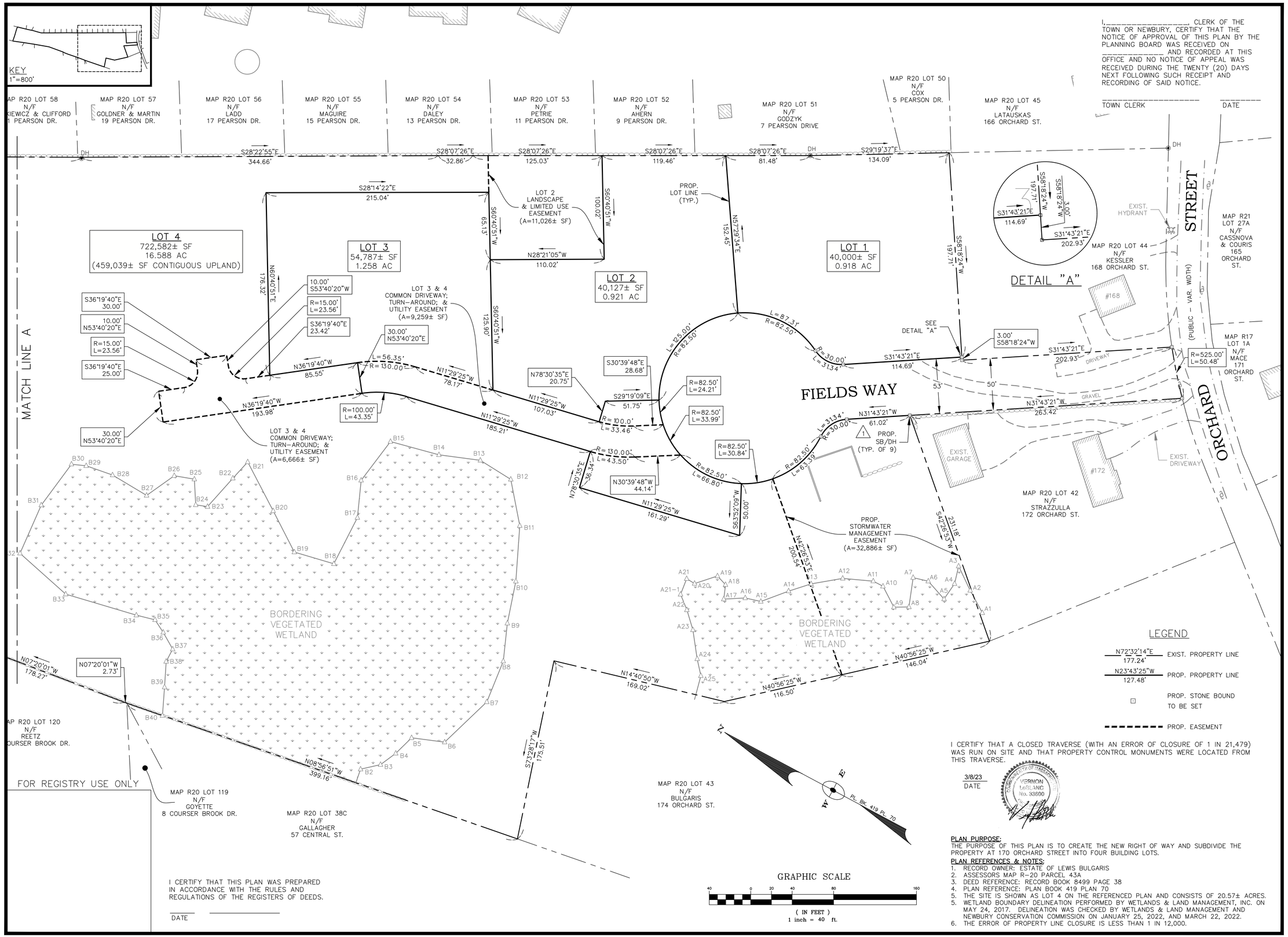

I, _____, CLERK OF THE TOWN OR NEWBURY, CERTIFY THAT THE NOTICE OF APPROVAL OF THIS PLAN BY THE PLANNING BOARD WAS RECEIVED ON _____ AND RECORDED AT THIS OFFICE AND NO NOTICE OF APPEAL WAS RECEIVED DURING THE TWENTY (20) DAYS NEXT FOLLOWING SUCH RECEIPT AND RECORDING OF SAID NOTICE.

_____ TOWN CLERK _____ DATE

I CERTIFY THAT THIS PLAN WAS PREPARED IN ACCORDANCE WITH THE RULES AND REGULATIONS OF THE REGISTERS OF DEEDS.

_____ DATE _____

I CERTIFY THAT A CLOSED TRAVERSE (WITH AN ERROR OF CLOSURE OF 1 IN 21,479) WAS RUN ON SITE AND THAT PROPERTY CONTROL MONUMENTS WERE LOCATED FROM THIS TRAVERSE.

3/8/23 DATE

COMMONWEALTH OF MASSACHUSETTS VERNON LeBLANC No. 33600

PLAN PURPOSE:
THE PURPOSE OF THIS PLAN IS TO CREATE THE NEW RIGHT OF WAY AND SUBDIVIDE THE PROPERTY AT 170 ORCHARD STREET INTO FOUR BUILDING LOTS.

PLAN REFERENCES & NOTES:
1. RECORD OWNER: ESTATE OF LEWIS BULGARIS
2. ASSESSORS MAP R-20 PARCEL 43A
3. DEED REFERENCE: RECORD BOOK 8499 PAGE 38
4. PLAN REFERENCE: PLAN BOOK 419 PLAN 70
5. THE SITE IS SHOWN AS LOT 4 ON THE REFERENCED PLAN AND CONSISTS OF 20.57± ACRES.
5. WETLAND BOUNDARY DELINEATION PERFORMED BY WETLANDS & LAND MANAGEMENT, INC. ON MAY 24, 2017. DELINEATION WAS CHECKED BY WETLANDS & LAND MANAGEMENT AND NEWBURY CONSERVATION COMMISSION ON JANUARY 25, 2022, AND MARCH 22, 2022.
6. THE ERROR OF PROPERTY LINE CLOSURE IS LESS THAN 1 IN 12,000.

TOWN OF NEWBURY PLANNING BOARD

DATE:

OWNER & APPLICANT:
ESTATE OF LEWIS BULGARIS
C/O DIANNE YURKAVICH
2 LAVALLEE LANE
NEWBURYPORT, MA 01915

No.	Date	Description
1	3/8/23	ADD (2) SBDH @ ENTRANCE; ADD BLDGS ON ADJ. LOTS.

Revisions

LEBLANC SURVEY ASSOCIATES
161 HOLTEN STREET
DANVERS, MA 01923
978-774-6012

Griffin Engineering Group, LLC
495 Cabot Street, 2nd Floor
Beverly, MA 01915
Tel: 978-927-5111
Fax: 978-927-5103

FIELDS WAY SUBDIVISION
170 ORCHARD ST.
NEWBURY, MA

LOTTING PLAN I
(1 OF 2)

Scale: 1"=40'
Job No: 2043
Date: 1/4/23

C-4

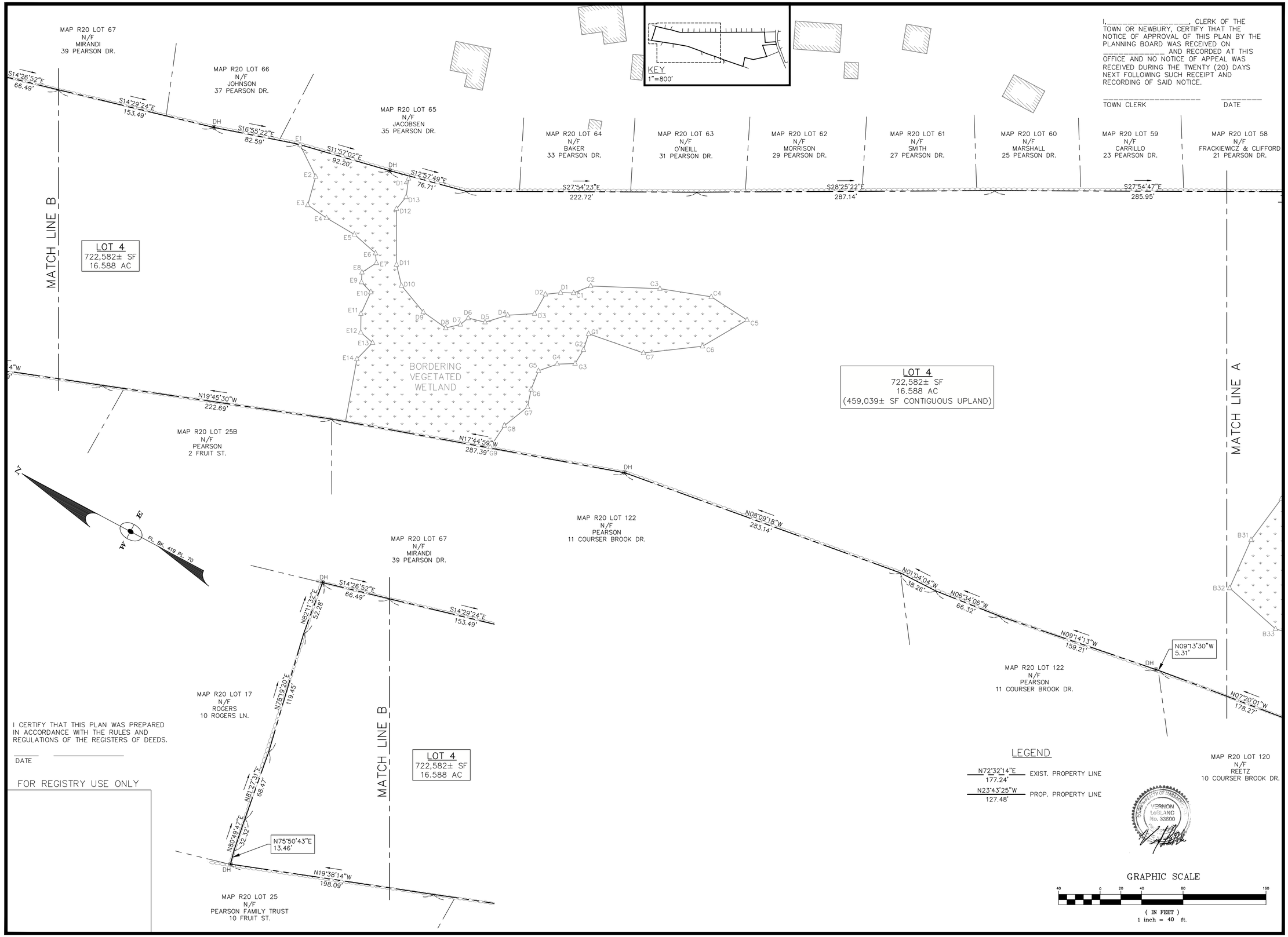

I, _____, CLERK OF THE TOWN OR NEWBURY, CERTIFY THAT THE NOTICE OF APPROVAL OF THIS PLAN BY THE PLANNING BOARD WAS RECEIVED ON _____, AND RECORDED AT THIS OFFICE AND NO NOTICE OF APPEAL WAS RECEIVED DURING THE TWENTY (20) DAYS NEXT FOLLOWING SUCH RECEIPT AND RECORDING OF SAID NOTICE.

_____ TOWN CLERK

_____ DATE

I CERTIFY THAT THIS PLAN WAS PREPARED IN ACCORDANCE WITH THE RULES AND REGULATIONS OF THE REGISTERS OF DEEDS.

_____ DATE

FOR REGISTRY USE ONLY

TOWN OF NEWBURY PLANNING BOARD

DATE:

OWNER & APPLICANT:
ESTATE OF LEWIS BULGARIS
C/O DIANNE YURKAVICH
2 LAVALLEE LANE
NEWBURYPORT, MA 01915

No.	Date	Description

Revisions

LEBLANC SURVEY ASSOCIATES
161 HOLTEN STREET
DANVERS, MA 01923
978-774-6012

Griffin Engineering Group, LLC
495 Cabot Street, 2nd Floor
Beverly, MA 01915
Tel: 978-927-5111
Fax: 978-927-5103

FIELDS WAY SUBDIVISION
170 ORCHARD ST.
NEWBURY, MA

LOTTING PLAN II
(2 OF 2)

Scale: 1"=40'
Job No: 2043
Date: 1/4/23

C-5

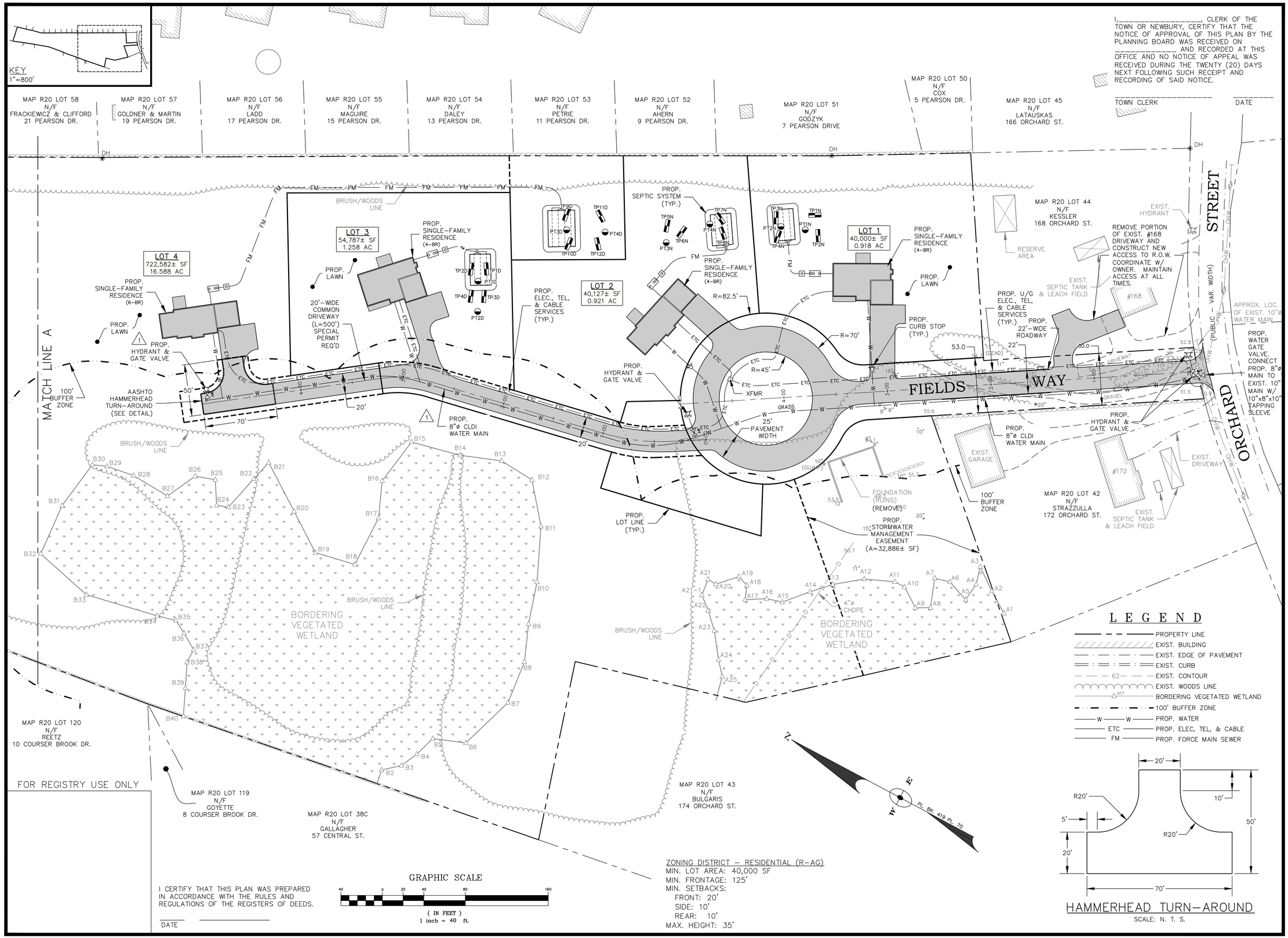

I,_____, CLERK OF THE TOWN OF NEWBURY, CERTIFY THAT THE NOTICE OF APPROVAL OF THIS PLAN BY THE PLANNING BOARD WAS RECEIVED ON _____ AND RECORDED AT THIS OFFICE AND NO NOTICE OF APPEAL WAS RECEIVED DURING THE TWENTY (20) DAYS NEXT FOLLOWING SUCH RECEIPT AND RECORDING OF SAID NOTICE.

_____ TOWN CLERK

_____ DATE

ZONING DISTRICT – RESIDENTIAL (R-AG)
MIN. LOT AREA: 40,000 SF
MIN. FRONTAGE: 125'
MIN. SETBACKS:
FRONT: 20'
SIDE: 10'
REAR: 10'
MAX. HEIGHT: 35'

I CERTIFY THAT THIS PLAN WAS PREPARED IN ACCORDANCE WITH THE RULES AND REGULATIONS OF THE REGISTERS OF DEEDS.

_____ DATE

FOR REGISTRY USE ONLY

TOWN OF NEWBURY PLANNING BOARD

DATE:

OWNER & APPLICANT:
ESTATE OF LEWIS BULGARIS
C/O DIANNE YURKAVICH
2 LAVALLEE LANE
NEWBURYPORT, MA 01915

No.	Date	Description
1	3/8/23	ADD HYD @ END OF CMN DWY PER FD COMMENTS;

Revisions

ROBERT H. GRIFFIN CIVIL #36686 PROFESSIONAL ENGINEER COMMONWEALTH OF MASSACHUSETTS
3-8-23

Griffin Engineering Group, LLC
495 Cabot Street, 2nd Floor
Beverly, MA 01915
Tel: 978-927-5111
Fax: 978-927-5103

FIELDS WAY SUBDIVISION

170 ORCHARD ST.
NEWBURY, MA

SITE LAYOUT & UTILITIES PLAN

Scale: 1"=40'
Job No: 2043
Date: 1/4/23

C-6

I, _____, CLERK OF THE TOWN OR NEWBURY, CERTIFY THAT THE NOTICE OF APPROVAL OF THIS PLAN BY THE PLANNING BOARD WAS RECEIVED ON _____ AND RECORDED AT THIS OFFICE AND NO NOTICE OF APPEAL WAS RECEIVED DURING THE TWENTY (20) DAYS NEXT FOLLOWING SUCH RECEIPT AND RECORDING OF SAID NOTICE.

_____ TOWN CLERK

_____ DATE

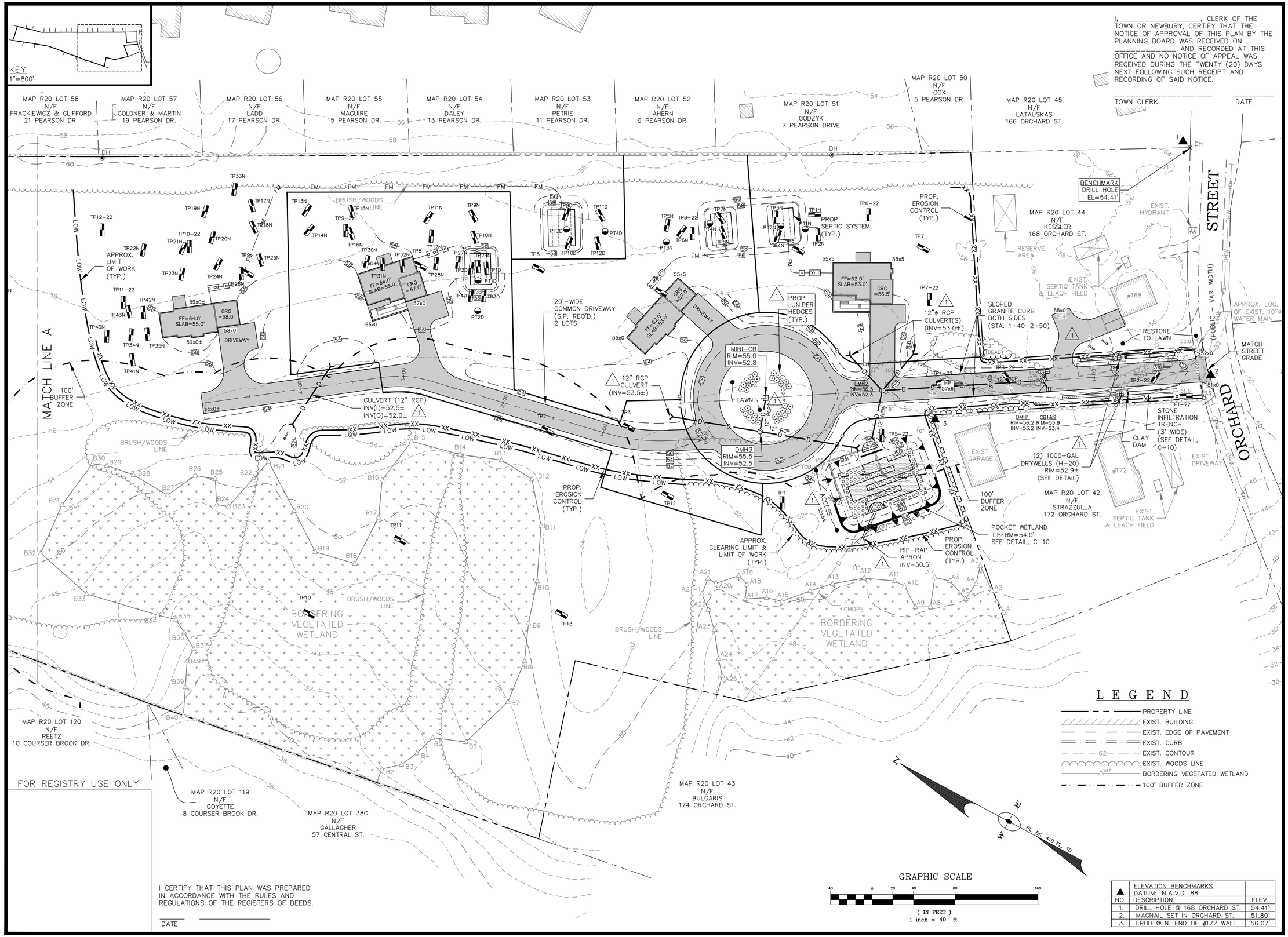

FOR REGISTRY USE ONLY

I CERTIFY THAT THIS PLAN WAS PREPARED IN ACCORDANCE WITH THE RULES AND REGULATIONS OF THE REGISTERS OF DEEDS.

_____ DATE

▲	ELEVATION BENCHMARKS DATUM: N.A.V.D. 88	
NO.	DESCRIPTION	ELEV.
1.	DRILL HOLE @ 168 ORCHARD ST.	54.41'
2.	MAGNAIL SET IN ORCHARD ST.	51.80'
3.	I.ROD @ N. END OF #172 WALL	56.07'

TOWN OF NEWBURY PLANNING BOARD

DATE:

OWNER & APPLICANT:
ESTATE OF LEWIS BULGARIS
C/O DIANNE YURKAVICH
2 LAVALLEE LANE
NEWBURYPORT, MA 01915

No.	Date	Description
1	3/8/23	CLARIFY ROAD GRADES; ADD PROP. SPOT GRADES; ADD SEPTIC GRADES; ADD ISLAND PLANTS; MOVE RIPRAP APRON; ADD BM #3. ADD EXIST. DRAIN PIPE @ BVW. REV. 10"ø PIPES TO 12"ø PER TOWN REGS. ADD #168 ACCESS REV. SWM @ ENTRANCE.

Revisions

COMMONWEALTH OF MASSACHUSETTS
ROBERT H. GRIFFIN
CIVIL
#36686
PROFESSIONAL ENGINEER
3-8-23

Griffin Engineering Group, LLC
495 Cabot Street, 2nd Floor
Beverly, MA 01915
Tel: 978-927-5111
Fax: 978-927-5103

FIELDS WAY SUBDIVISION

170 ORCHARD ST.
NEWBURY, MA

SITE GRADING & DRAINAGE PLAN

Scale: 1"=40'
Job No: 2043
Date: 1/4/23

C-7

I,_____, CLERK OF THE TOWN OR NEWBURY, CERTIFY THAT THE NOTICE OF APPROVAL OF THIS PLAN BY THE PLANNING BOARD WAS RECEIVED ON _____ AND RECORDED AT THIS OFFICE AND NO NOTICE OF APPEAL WAS RECEIVED DURING THE TWENTY (20) DAYS NEXT FOLLOWING SUCH RECEIPT AND RECORDING OF SAID NOTICE.

_____ _____
TOWN CLERK DATE

LEGEND

EXISTING GRADE
PROPOSED CENTERLINE
PROP. WATER LINE

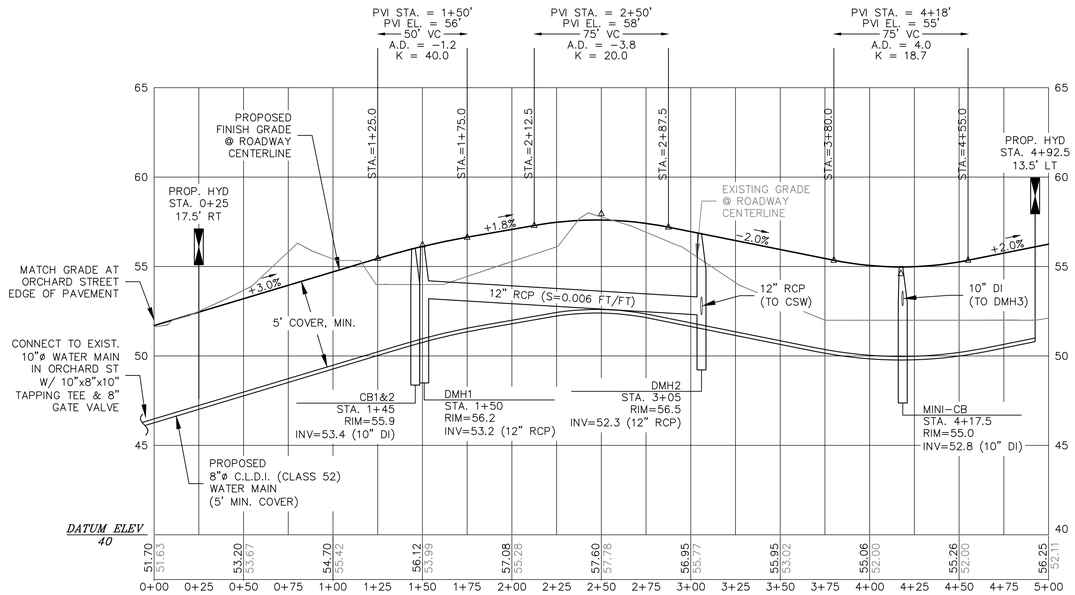

ROADWAY CENTERLINE PROFILE

HORIZONTAL SCALE: 1" = 40'
VERTICAL SCALE: 1" = 4'

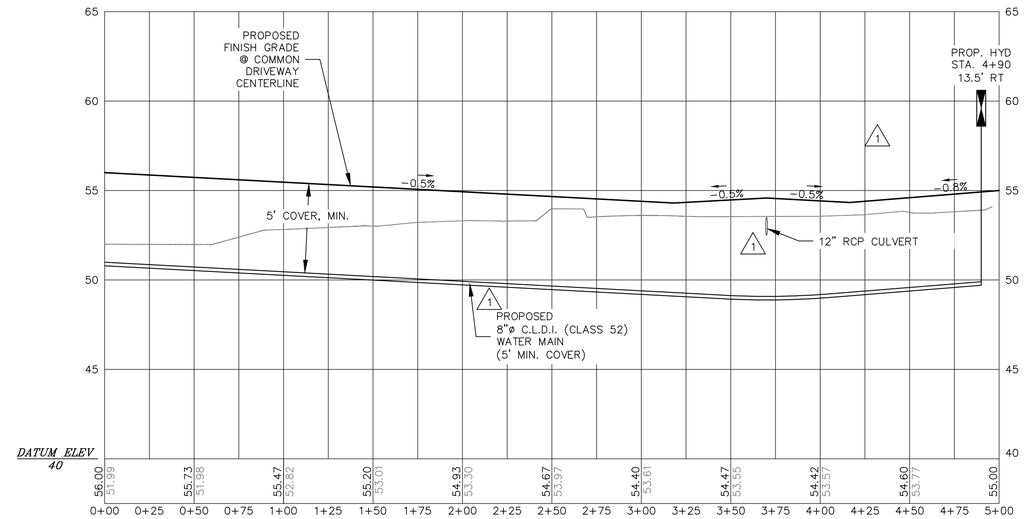

COMMON DRIVEWAY CENTERLINE PROFILE

HORIZONTAL SCALE: 1" = 40'
VERTICAL SCALE: 1" = 4'

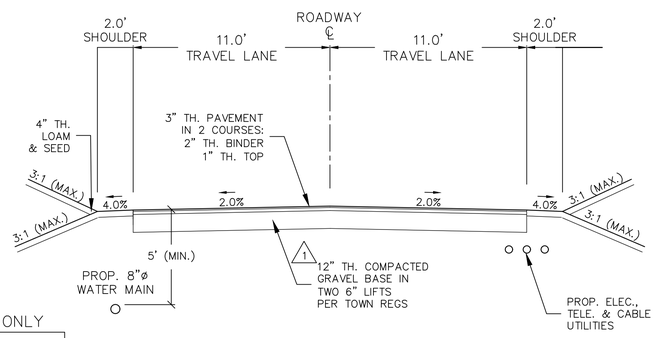

ROADWAY SECTION (TYP.)

SCALE: 1" = 4'

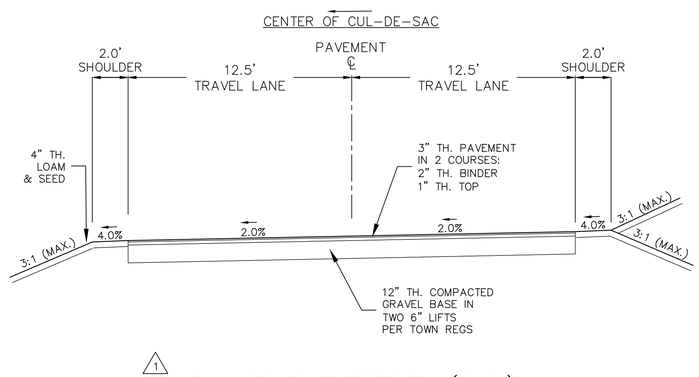

CUL-DE-SAC SECTION (TYP.)

SCALE: 1" = 4'

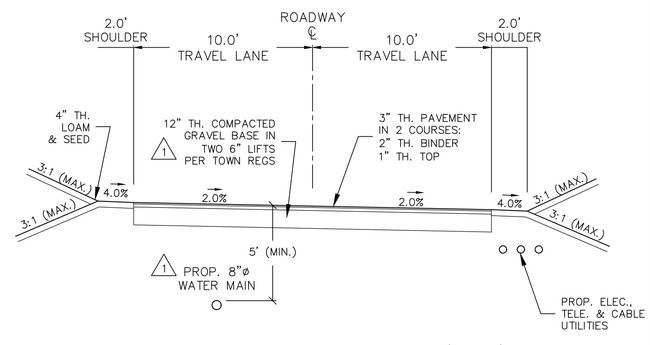

COMMON DRIVEWAY SECTION (TYP.)

SCALE: 1" = 4'

FOR REGISTRY USE ONLY

I CERTIFY THAT THIS PLAN WAS PREPARED IN ACCORDANCE WITH THE RULES AND REGULATIONS OF THE REGISTERS OF DEEDS.

_____ _____
DATE

NOTES:

1. REMOVE ALL LOAM, ROOTS, SUBSOIL AND DELETERIOUS MATERIALS.
2. 4" LOAM, SEED AND MULCH ALL DISTURBED AREAS.
   LOAM = M 1.05.0
   SEED = M 6.03.0 SLOPE MIX
   MULCH = M 6.04.0 ANY TYPE
3. COMPACT ALL LAYERS, AND SUBGRADE, TO 95% MOD. PROCTOR.
4. MATERIAL REFERENCES ARE TO 1995 EDITION OF MASS. HIGHWAY STANDARD SPECIFICATIONS FOR HIGHWAYS AND BRIDGES.
5. ALL UTILITIES TO MEET PROVIDER REQUIREMENTS.
6. ENGINEER TO SET BENCHMARKS IN THE FIELD PRIOR TO CONSTRUCTION.

TOWN OF NEWBURY PLANNING BOARD

DATE:

OWNER & APPLICANT:
ESTATE OF LEWIS BULGARIS
C/O DIANNE YURKAVICH
2 LAVALLEE LANE
NEWBURYPORT, MA 01915

No.	Date	Description
1	3/8/23	REV. GRAVEL BASE NOTE; ADD CUL-DE-SAC X-SECT; REV. CMN. DWY. PROFILE.

Revisions

ROBERT H. GRIFFIN CIVIL #36686 COMMONWEALTH OF MASSACHUSETTS PROFESSIONAL ENGINEER
3-8-23

Griffin Engineering Group, LLC
495 Cabot Street, 2nd Floor
Beverly, MA 01915
Tel: 978-927-5111
Fax: 978-927-5103

FIELDS WAY SUBDIVISION

170 ORCHARD ST.
NEWBURY, MA

PROFILES & CROSS-SECTIONS

Scale: AS-SHOWN
Job No: 2043
Date: 1/4/23

C-8

KEY:
1. 1" CLASS 1 BIT. CONCRETE TOP COURSE TYPE I-1 (M3.11.0 -TABLE A).
2. 2" CLASS 1 BIT. CONCRETE BINDER COURSE (M3.11.0 - TABLE A).
3. 12" DENSE GRADED CRUSHED STONE FOR SUB-BASE (M2.01.7)
4. PREPARED SUBGRADE.

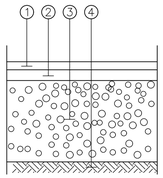

FULL DEPTH PAVEMENT

SCALE: N. T. S.

NOTES:
1. REMOVE ALL LOAM, ROOTS, SUBSOIL AND DELETERIOUS MATERIALS.
2. COMPACT ALL LAYERS, AND SUBGRADE, TO 95% MOD. PROCTOR.
3. MATERIAL REFERENCES ARE TO 1995 EDITION OF MASS.HIGHWAY STANDARD SPECIFICATIONS FOR HIGHWAYS AND BRIDGES.
4. 4" LOAM, SEED AND MULCH ALL DISTURBED AREAS.
   LOAM = M 1.05.0
   SEED = M 6.03.0 SLOPE MIX
   MULCH = M 6.04.0 ANY TYPE
5. IN LEDGE, REMOVE LEDGE TO MIN. DEPTH OF 24" BELOW FINISH GRADE; BACKFILL WITH COMPACTED GRAVEL.

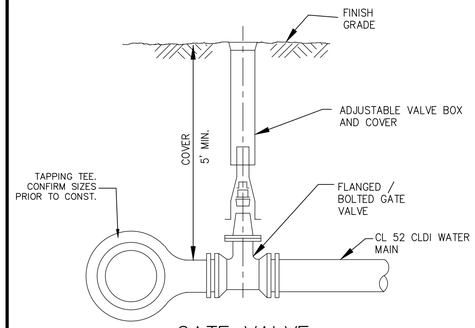

GATE VALVE

SCALE: N. T. S.

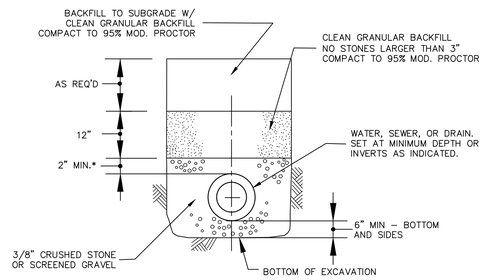

* FOR DUCTILE IRON OR RCP PIPE: TOP OF STONE IS MID-DEPTH (SPRING LINE) OF CONDUIT.

TYPICAL PIPE BEDDING SECTION

SCALE: N. T. S.

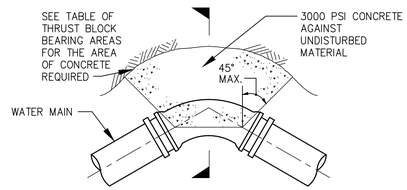

PLAN OF THRUST BLOCK AT BEND

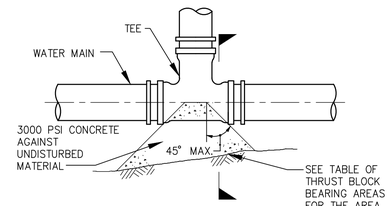

PLAN OF THRUST BLOCK AT TEE

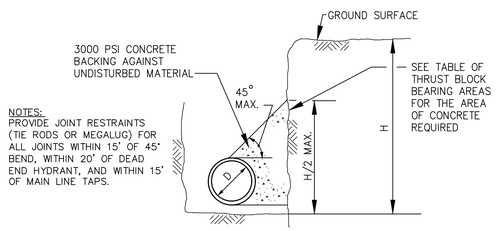

NOTES:
PROVIDE JOINT RESTRAINTS (TIE RODS OR MEGALUG) FOR ALL JOINTS WITHIN 15' OF 45° BEND, WITHIN 20' OF DEAD END HYDRANT, AND WITHIN 15' OF MAIN LINE TAPS.

THRUST BLOCK SECTION

CONCRETE THRUST BLOCK

SCALE: N. T. S.

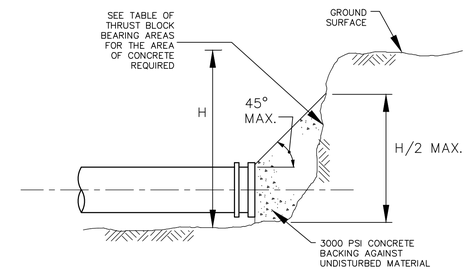

CONCRETE THRUST BLOCK AT PLUG

SCALE: N. T. S.

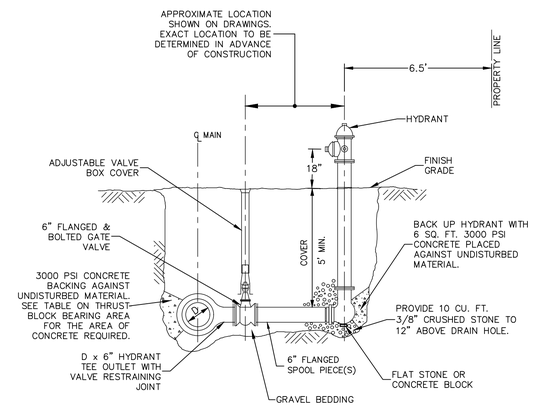

TYPICAL HYDRANT ASSEMBLY

SCALE: N. T. S.

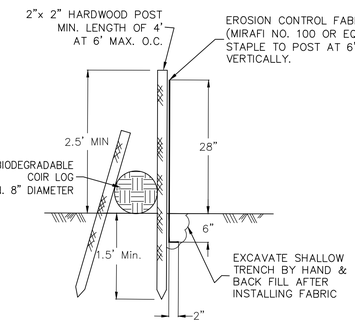

SILT FENCE & COIR LOG

EROSION CONTROL

SCALE: N. T. S.

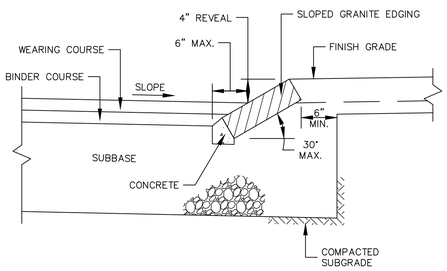

SLOPED GRANITE CURB

SCALE: N. T. S.

TABLE OF MINIMUM BEARING AREAS IN SQ. FT. AGAINST UNDISTURBED MATERIAL								
PIPE SIZE	BEND	PRESSURE 150 PSI						
		TYPE OF SOIL CONDITION						
		A	B	C	D	E	F	G
6" and smaller	TEES & PLUGS	8.5	4.5	3	2.5	1.5	1.5	1
	90	12	6	4	3	2	1.5	1.5
	45	6.5	3.5	2.5	2	1.5	1	1
	22 1 /2	3.5	2	1.5	1	1	0.5	0.5
8"	TEES & PLUGS	15.5	8	5.5	4	3	2	1.5
	90	21.5	11	7.5	5.5	4	3	2.5
	45	12	6	4	3	2	1.5	1.5
	22 1 /2	6	3	2	1.5	1	1	1

TYPE OF SOIL CONDITION

A - SOFT CLAY; FINE LOOSE SAND
B - SAND & CLAY; MIXED OR IN LAYERS; FINE CONFINED SAND
C - HARD DRY CLAY
D - COARSE SAND
E - GRAVEL
F - SOFT ROCK
G - HARD PAN

NOTES:
1. FOR FITTINGS WITH LESS THAN 22 ½ DEFLECTION USE BEARING AREAS FOR 22 ½ BEND.
2. JOINTS SHALL NOT BE ENCASED IN CONCRETE. BEARING AREAS MAY BE DISREGARDED FOR TRENCHES IN ROCK WHERE THE TOP OF THE ROCK FACE IS AT OR ABOVE THE CROWN OF THE PIPE. HOWEVER, CONCRETE BACKING SHALL BE PLACED BETWEEN THE PIPE AND ROCK FACE.

CONCRETE THRUST BLOCK BEARING AREA

SCALE: N. T. S.

I,_____, CLERK OF THE TOWN OR NEWBURY, CERTIFY THAT THE NOTICE OF APPROVAL OF THIS PLAN BY THE PLANNING BOARD WAS RECIEVED ON _____ AND RECORDED AT THIS OFFICE AND NO NOTICE OF APPEAL WAS RECEIVED DURING THE TWENTY (20) DAYS NEXT FOLLOWING SUCH RECEIPT AND RECORDING OF SAID NOTICE.

_____ _____
TOWN CLERK DATE

FOR REGISTRY USE ONLY

I CERTIFY THAT THIS PLAN WAS PREPARED IN ACCORDANCE WITH THE RULES AND REGULATIONS OF THE REGISTERS OF DEEDS.

_____ _____
DATE

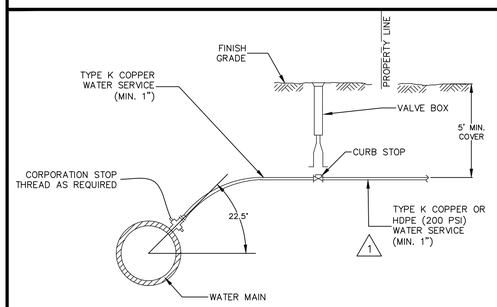

WATER SERVICE CONNECTION

SCALE: N. T. S.

NOTES:
1. ALL CONNECTIONS PER TOWN OF NEWBURY REQUIREMENTS.

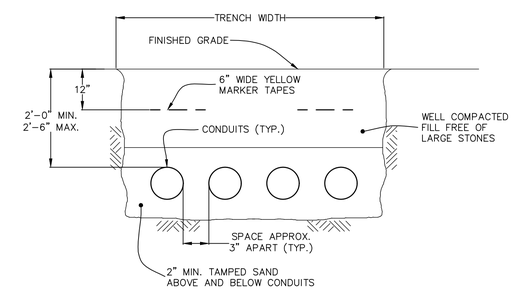

UNDERGROUND CONDUIT TRENCH FOR MULTIPLE CONDUITS

SCALE: N. T. S.

TOWN OF NEWBURY PLANNING BOARD

DATE:

OWNER & APPLICANT:
ESTATE OF LEWIS BULGARIS
C/O DIANNE YURKAVICH
2 LAVALLEE LANE
NEWBURYPORT, MA 01915

No.	Date	Description
1	3/8/23	ADD HDPE WTR SERVICE NOTE.

Revisions

ROBERT H. GRIFFIN CIVIL #36686 COMMONWEALTH OF MASSACHUSETTS PROFESSIONAL ENGINEER
3-8-23

Griffin Engineering Group, LLC
495 Cabot Street, 2nd Floor
Beverly, MA 01915
Tel: 978-927-5111
Fax: 978-927-5103

FIELDS WAY SUBDIVISION

170 ORCHARD ST.
NEWBURY, MA

DETAILS I

Scale: AS-SHOWN
Job No: 2043
Date: 1/4/23

C-9

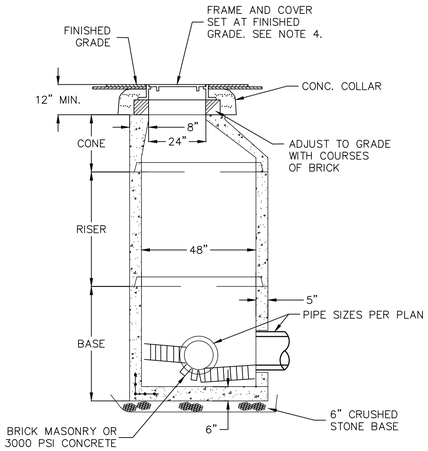

SECTION VIEW

NOTES:
1. CONCRETE 4,000 PSI MINIMUM AFTER 28 DAYS.
2. REINFORCED STEEL SHALL CONFORM TO LATEST ASTM A185 SPEC. 0.12 SQ. IN./LINEAL FT. AND 0.12 SQ. IN. (BOTH WAYS) BASE BOTTOM.
3. H-20 DESIGN LOADING.
4. EJCO 0MA124000023 FRAME & SOLID COVER 0MA124000026 (MARKED DRAIN) OR APPROVED EQUIVALENT.
5. SHEA PRECAST OR APPROVED EQUIVALENT.
6. TONGUE & GROOVE JOINTS SEALED WITH BUTYL RESIN. BUTYL RESIN.

PRECAST DRAIN MANHOLE

SCALE: N. T. S.

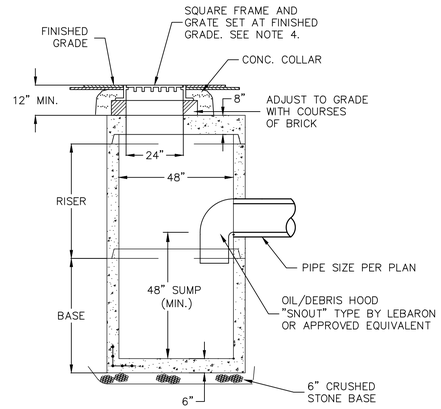

SECTION VIEW

NOTES:
1. CONCRETE 4,000 PSI MINIMUM AFTER 28 DAYS.
2. REINFORCED STEEL SHALL CONFORM TO LATEST ASTM A185 SPEC. 0.12 SQ. IN./LINEAL FT. AND 0.12 SQ. IN. (BOTH WAYS) BASE BOTTOM.
3. H-20 DESIGN LOADING.
4. EJCO 0MA552000029 FOUR FLANGE OR APPROVED EQUIVALENT.
5. SHEA PRECAST OR APPROVED EQUIVALENT.
6. TONGUE & GROOVE JOINTS SEALED WITH BUTYL RESIN. BUTYL RESIN.
7. FOUNDATION SUPPORT PER GEOTECHNICAL ENGINEER.

4'ø PRECAST CATCH BASIN

SCALE: N. T. S.

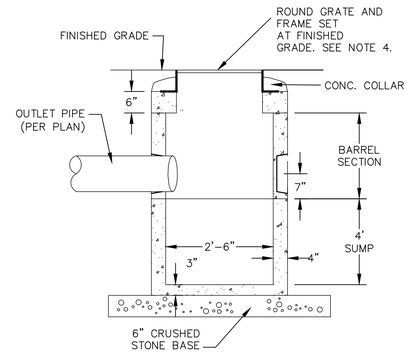

NOTES:
1. CONCRETE 4,000 PSI MINIMUM AFTER 28 DAYS.
2. REINFORCED STEEL SHALL CONFORM TO LATEST ASTM A185 SPEC. 0.12 SQ. IN./LINEAL FT. AND 0.12 SQ. IN. (BOTH WAYS) BASE BOTTOM.
3. H-20 DESIGN LOADING.
4. EAST JORDAN IRON WORKS, INC 24" DIA. HEAVY DUTY GRATE & FRAME (PRODUCT #00113040C03) OR APPROVED EQUIVALENT.
5. E.F. SHEA 30" PRECAST DRAIN MANHOLE OR APPROVED EQUIVALENT.
6. TONGUE & GROOVE JOINTS SEALED WITH BUTYL RESIN. BUTYL RESIN.
7. ALL DRAIN AND SEWER STRUCTURES AT THIS SITE REQUIRES FLEXIBLE RUBBER BOOT AT PIPE TO MANHOLE CONNECTIONS.

30"ø MINI CATCH BASIN

SCALE: N. T. S.

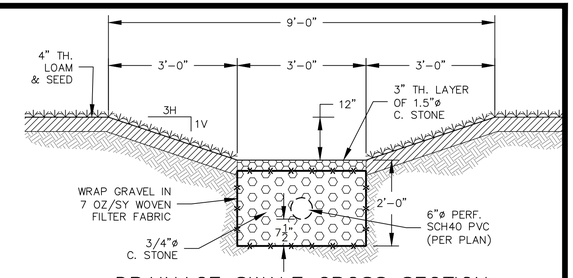

DRAINAGE SWALE CROSS SECTION

SCALE: N. T. S.

TREES AND SHRUBS

Smooth Alder *(Alnus serrulata)*
American Beech *(Fagus grandifolia)*
American Holly *(Ilex opaca)*
Blackgum, Sourgum *(Nyssa sylvatica)*
Black Willow *(Salix nigra)*
Buttonbush *(Cephalanthus occidentalis)*
Chokecherry *(Prunus virginiana)*
Elderberry *(Sambucus canadensis)*
Fringe Tree *(Chionanthus virginicus)*
Green Ash, Red Ash *(Fraxinus pennsylvanica)*
Honey Locust *(Gleditsia triacanthos)*
Highbush Cranberry *(Viburnum trilobum)*
Larch, Tamarack *(Larix laricina)*
Mountain Laurel *(Kalmia latifolia)*
Persimmon *(Diospyros virginiana)*
Red Chokeberry *(Pyrus arbutifolia)*
Red Maple *(Acer rubrum)*
Red-osier Dogwood *(Cornus stolonifera)*
***Rhododendron* spp**
River Birch *(Betula nigra)*
Shadbush, Common Serviceberry *(Amelanchier arborea)*
Silky Dogwood *(Cornus amomum)*
Silver Maple *(Acer saccarinum)*
Southern Arrowwood *(Viburnum dentatum)*
Spice Bush *(Lindera benzoin)*
Swamp Magnolia, Sweetbay *(Magnolia virginiana)*
Swamp Oak *(Quercus bicolor)*
Sweetgum *(Liquidambar styraciflua)*
Sycamore *(Platanus occidentalis)*
Tulip-tree *(Liriodendron tulipifera)*
Tupelo *(Nyssa sylvatica vari biflora)*
Willow Oak, Pin Oak *(Quercus phellos/palustris)*
Winterberry *(Ilex laevigata)*
Witch Hazel *(Hamamelis virginiana)*

WETLAND PLANTS

Arrow Arum, Duck Corn *(Peltandra virginica)*
Arrowhead, Duck Potato *(Saggitaria latifolia)*
Broomsedge *(Andropogon virginianus)*
Cattail *(Typha spp)*
Coontail *(Ceratophyllum demersum)*
Common Three-Square *(Scirpus americanus)*
Soft-stem Bulrush *(Scirpus validus)*
Lizard's Tail *(Saururus cernuus)*
Pickerelweed *(Pontederia cordata)*
Pondweed *(Potamogeton)*
Rice Cutgrass *(Leersia oryzoides)*
Sedges *(Carex spp)*
Smartweed *(Polygonum spp)*
Spatterdock *(Nuphar luteum)*
Switchgrass *(Panicum virgatum)*
Sweet Flag *(Acorus calumus)*
Water Iris *(Iris pseudoacorus)*

NOTE:
1. PLANTS SHALL BE SELECTED FROM THIS LIST OR APPROVED ALTERNATIVE. SUBSTITUTIONS MAY BE MADE BASED ON NURSERY STOCK.
2. REF. SCHUELER 1992

PLANT LIST FOR CONSTRUCTED STORMWATER WETLAND

SCALE: N. T. S.

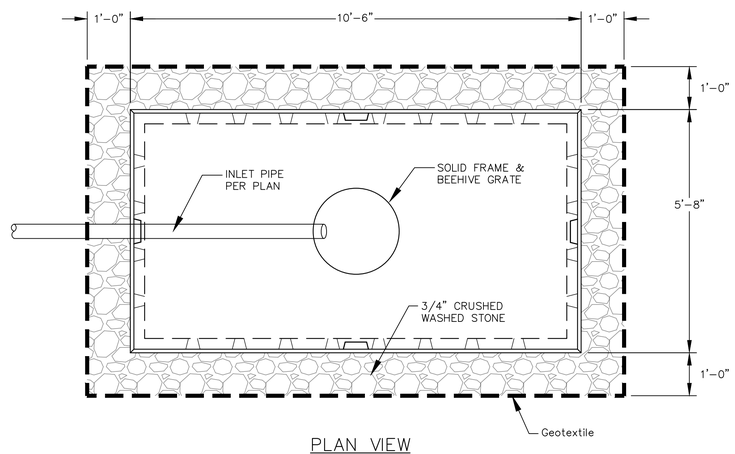

PLAN VIEW

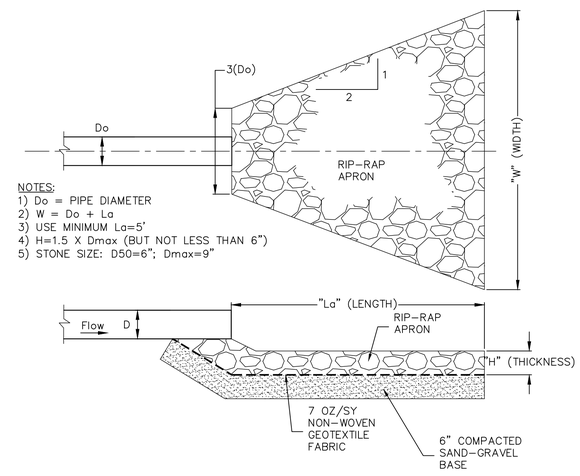

NOTES:
1) Do = PIPE DIAMETER
2) W = Do + La
3) USE MINIMUM La=5'
4) H=1.5 X Dmax (BUT NOT LESS THAN 6")
5) STONE SIZE: D50=6"; Dmax=9"

RIP-RAP APRON DETAIL

SCALE: N. T. S.

I CERTIFY THAT THIS PLAN WAS PREPARED IN ACCORDANCE WITH THE RULES AND REGULATIONS OF THE REGISTERS OF DEEDS.

_____ _____
DATE

I,_____, CLERK OF THE TOWN OR NEWBURY, CERTIFY THAT THE NOTICE OF APPROVAL OF THIS PLAN BY THE PLANNING BOARD WAS RECIEVED ON _____ AND RECORDED AT THIS OFFICE AND NO NOTICE OF APPEAL WAS RECEIVED DURING THE TWENTY (20) DAYS NEXT FOLLOWING SUCH RECEIPT AND RECORDING OF SAID NOTICE.

_____ _____
TOWN CLERK DATE

FOR REGISTRY USE ONLY

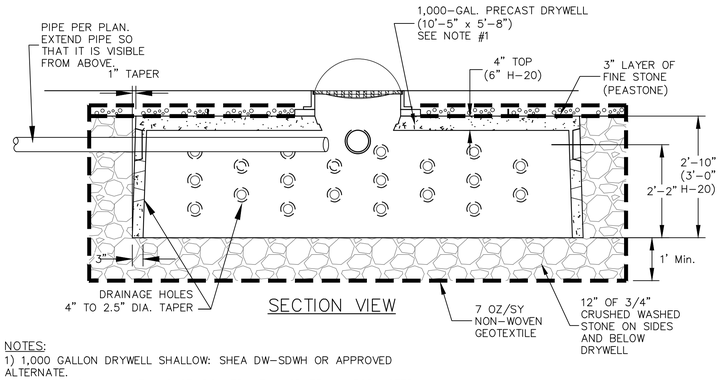

SECTION VIEW

NOTES:
1) 1,000 GALLON DRYWELL SHALLOW: SHEA DW-SDWH OR APPROVED ALTERNATE.
2) DRYWELL SHALL HAVE A CAST IRON FRAME & GRATE, UNLESS NOTED OTHERWISE.

1,000 GAL. DRYWELL DETAIL

SCALE: N. T. S.

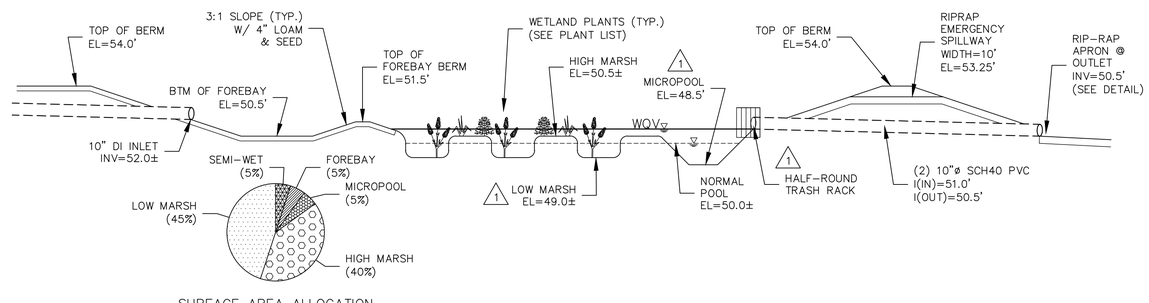

SURFACE AREA ALLOCATION
(SEE PLAN)

POCKET WETLAND (TYP.)

SCALE: N.T.S.

TOWN OF NEWBURY PLANNING BOARD

DATE:

OWNER & APPLICANT:
ESTATE OF LEWIS BULGARIS
C/O DIANNE YURKAVICH
2 LAVALLEE LANE
NEWBURYPORT, MA 01915

No.	Date	Description
1	3/8/23	REMOVE AREA DRAIN DETAIL; ADD DRYWELL DETAIL; REV. POCKET WETLAND ELEVS; ADD TRASH RACK.

Revisions

ROBERT H. GRIFFIN CIVIL #36886 COMMONWEALTH OF MASSACHUSETTS PROFESSIONAL ENGINEER
3-8-23

Griffin Engineering Group, LLC
495 Cabot Street, 2nd Floor
Beverly, MA 01915
Tel: 978-927-5111
Fax: 978-927-5103

FIELDS WAY SUBDIVISION

170 ORCHARD ST.
NEWBURY, MA

DETAILS II

Scale: AS-SHOWN
Job No: 2043
Date: 1/4/23

C-10